EzyFlow 32/40 Universal Pop-up Plug & Waste

Brushed Nickel

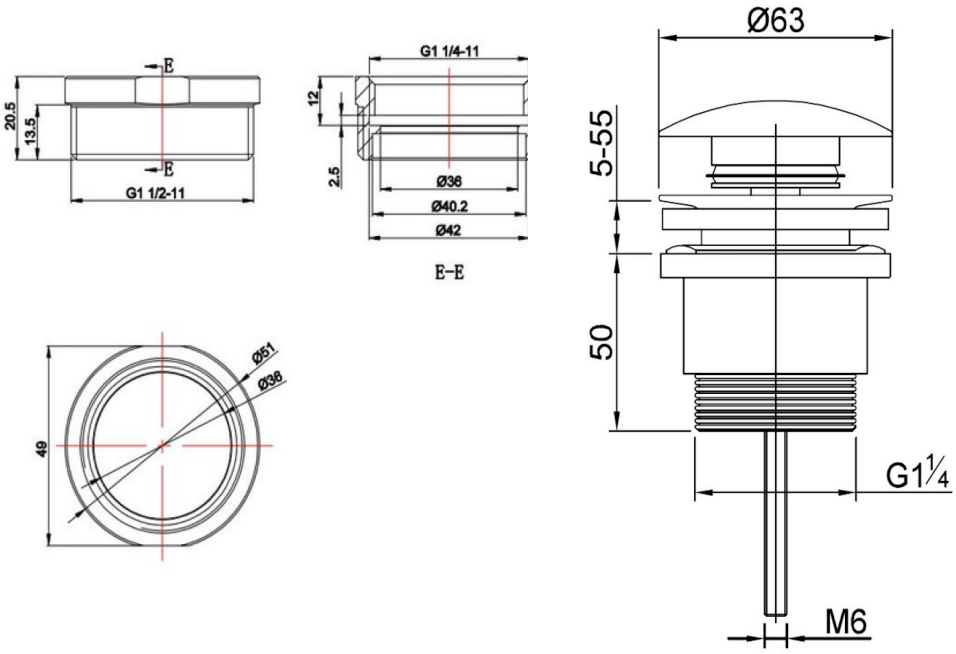

Product Specifications

Code	EZY-A706-Q-BN
Barcode	9339897007997
Material	Brass
With Pull Out Cartridge	

To Suit	32mm Basin Waste with 40mm Brass Adapter
Size	32/40mm Universal
Finish	Brushed Nickel
With Optional Overflow Included	

Experience, *the difference.*

LINSOL.COM.AU

1300 546 765

info@linsol.com.au

PO Box 88, Coniston NSW 2500

Warranty is for domestic use only. All information is correct as at time of writing.
The actual product may vary slightly and sizes may be scaled up or down