Archie Shower Combination with Multifunction Handpiece and 200mm Round Head

LINSOL

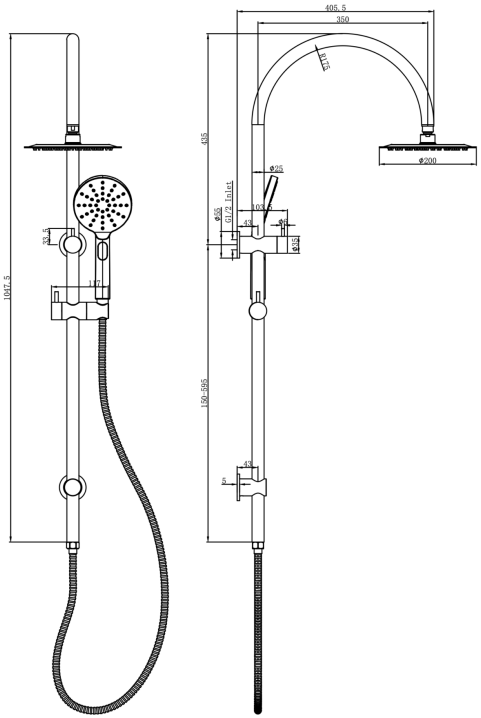

Product Specifications

Code:	ARC-35a-200R-BB
Finish:	Brushed Brass
Barcode:	9339900000000
WELS Star:	4 Star
WELS Rating:	7L/Min
Spindle/Divertor:	1/2 Turn Ceramic Disc
Primary Material:	304 Stainless Steel
Technical Features:	Inlet Position: Top
Special Features:	Spare Parts Available

ARC-35a-200R-MB
Matte Black
Electroplate

ARC-35a-200R-GM
Gunmetal
PVD

ARC-35a-200R-CH
Chrome
Electroplate

ARC-35a-200R-BN
Brushed Nickel
Raw Brush

ARC-35a-200R-BB
Brushed Brass
PVD

ARC-35a-200R-AB
Aged Bronze
PVD

Experience, *the difference.*

LINSOL.COM.AU

1300 546 765

info@linsol.com.au

PO Box 88, Coniston NSW 2500

All information is correct at time of writing. The actual product may vary slightly and sizes may be scaled up or down.
Warranty is for domestic use only. For warranty & care information please visit linsol.com.au/warranty