850 x 700mm Stainless Steel Grab Rail
Left Hand Angle

LINSOL

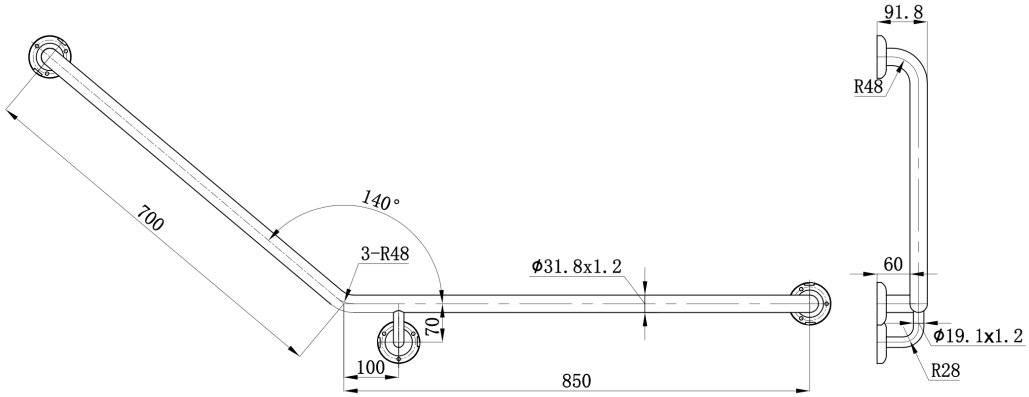

Product Specifications

Code:	SGR-85-LHA
Finish:	Brushed Stainless
Barcode:	9339897019125
Primary Material:	304 Stainless Steel

SGR-85-LHA
Brushed Stainless

ACCESSIBILITY COMPLIANT

Experience, *the difference.*

LINSOL.COM.AU

1300 546 765

info@linsol.com.au

PO Box 88, Coniston NSW 2500

All information is correct at time of writing. The actual product may vary slightly and sizes may be scaled up or down.
Warranty is for domestic use only. For warranty & care information please visit linsol.com.au/warranty